GATES eco tension tester

Universal transmissions GmbH
Külftalstr. 18
31093 Lübbrechtsen
Germany
Phone : (49)-5185-60266-50
info@carbondrive.net
www.carbondrivesystems.com

Including:

1x ruler
1x main tower
1x measuring weight
1x M6 bolt

Manual

1st: Assembly the measuring weight with the main tower with the M6 bolt.

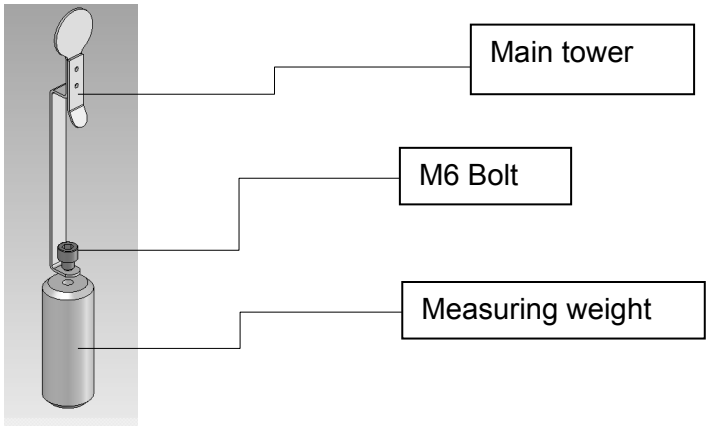

2nd: Hang the main tower on the belt as shown on the picture.

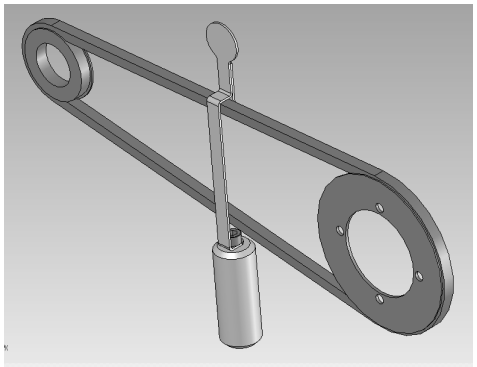

3rd: Put the ruler on the two sprockets.

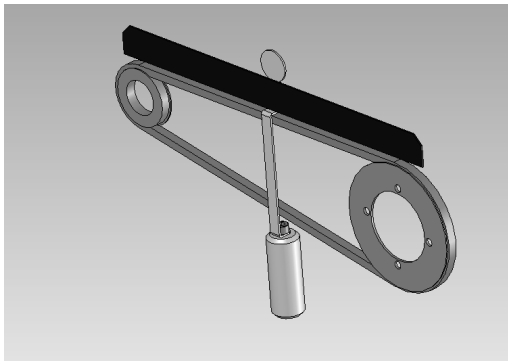

4th: Check the tension:

- Red: you need to increase the tension
- Green: the tension is good
- Yellow: you need to decrease the tension